TNV DI Series
Industrial Diesel Engine

Image shown may not be actual engine

4TNV84T-BGGE General Specification
35.9 HP (26.7 kW) @ 1800 rated rpm*

Type	4 Cylinder, 4-Cycle, Liquid Cooled Diesel Engine
Bore	84 mm
Stroke	90 mm
Displacement	1.995 L
Aspiration	Turbocharged
Combustion System	Direct Injection
Rotation (from flywheel end)	Counterclockwise
Dry Weight	396 lbs (179 kg)

Features

Clean Emissions
Building off the proven TNE design, Yanmar has achieved superior exhaust emissions by improving the combustion chamber and fuel injection equipment design. Engines are compliant with 2008 EPA Tier 4 and EU stage III A exhaust emissions regulations.

Reliable and Durable
The TNV engines now proudly take up the running as Yanmar's premium small industrial diesel. They offer even more enhanced durability due to better block cooling, a stiffer crank and pistons, finer tolerance in the journal, and more. CAE analysis has brought lower vibrations and higher strength to the mounting structure for even better reliability in heavy-duty jobs.

Fuel Delivery and Economy
A newly designed, in-line MP type fuel injector pump is utilized to assure more precise fuel delivery and control. The result is reduced emissions, improved performance over a wide range of applications and good fuel economy which assures that Yanmar's reputation for superior starting characteristics continues.

Noise Level Reduction
Yanmar's original CAE techniques have optimized the stiffness, minimized transformation, and reduced radiant noise in the cylinder block. Gear noise reduction is achieved through an improved gear tooth profile resulting in less mechanical noise.

Additional Information
Yanmar America Corp
951 Corporate Grove Drive
Buffalo Grove, IL 60089
www.yanmar.com

Distributed By:

Standard Engine Equipment

General
Intake & Exhaust Manifold
Exhaust Manifold Gasket (shipped loose)

Lubrication System
3.4 L Capacity Shallow Oil Pan
Trochoid Oil Pump
Paper Element Oil Filter
Oil Pressure Switch
Crankcase Breather, Closed Type

Electrical System
12V, 40 Amp Alternator
12V Starter Motor
12V, 400W Air Heater
Preheat Relay (shipped loose)
Preheat Timer, 15 second (shipped loose)
Stop Solenoid Timer, 1 second (shipped loose)

Fuel System
In-line MP2 Fuel Injection Pump
12V Electric Fuel Pump (shipped loose)
Paper Element Fuel Filter
Water Separator (shipped loose)
Stop Solenoid, Integral to Fuel Injection Pump (shipped loose)

Cooling System
Water Pump, Belt Driven
6-Blade, 380mm Cooling Fan—Pusher Type
70º F (21º C) Thermostat
Temperature Switch
Fan Belt

Power Take Off
Flywheel, SAE 7 1/2"
Flywheel Housing, SAE #4

4TNV84T-BGGE

Industrial Diesel Engine

Performance Data

Please Contact Yanmar for Details

Dimensions

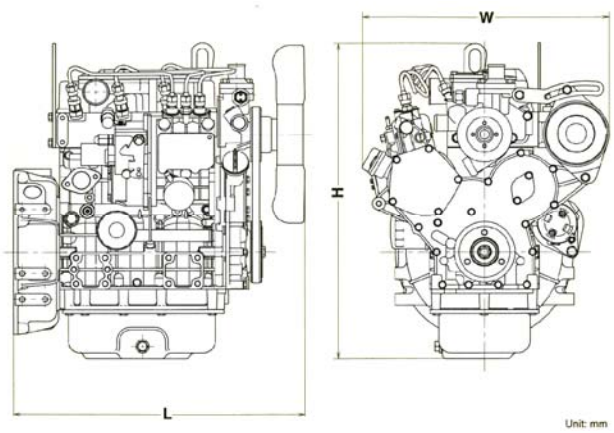

Length	27.3 in (694 mm)
Width	20.3 in (517 mm)
Height	27.9 in (709 mm)

Note: Dimensions depend on final specifications.

kW to Hp conversion used is expressed as: HP = (kW value) x 1.34

Rated Speed (rpm)	Net rated kW	Net rated HP	Max. Torque (ft-lb)
1800	26.7	35.9	Call Yanmar

Ratings Definitions and Conditions

*Rated power listed is NET engine output. The engine operating environment and driven machine conditions must be studied carefully when selecting an engine in order to ensure correct engine selection, maximize engine performance, extend engine service life and improve machine capacity.

Consult the TNV Application Manual for additional engine ratings and engine application information.

Application standards for Yanmar industrial engines: Inlet air standard conditions with a total barometric pressure of 100kPa (29.5 in. Hg), with a vapor pressure of 1 kPa (.295 in. Hg), and 25°C (77°F).

Materials and specifications herein are intended to serve as a guide in engine selection and subject to change without notice. The International System of Units (SI) is used in this publication. Yanmar and its logos, as well as corporate identity used herein, are trademarks of Yanmar and may not be used without permission.

Printed in USA

© 2008 Yanmar
All Rights Reserved